The versatile video all-rounder for your network

VIDEO NETBOX

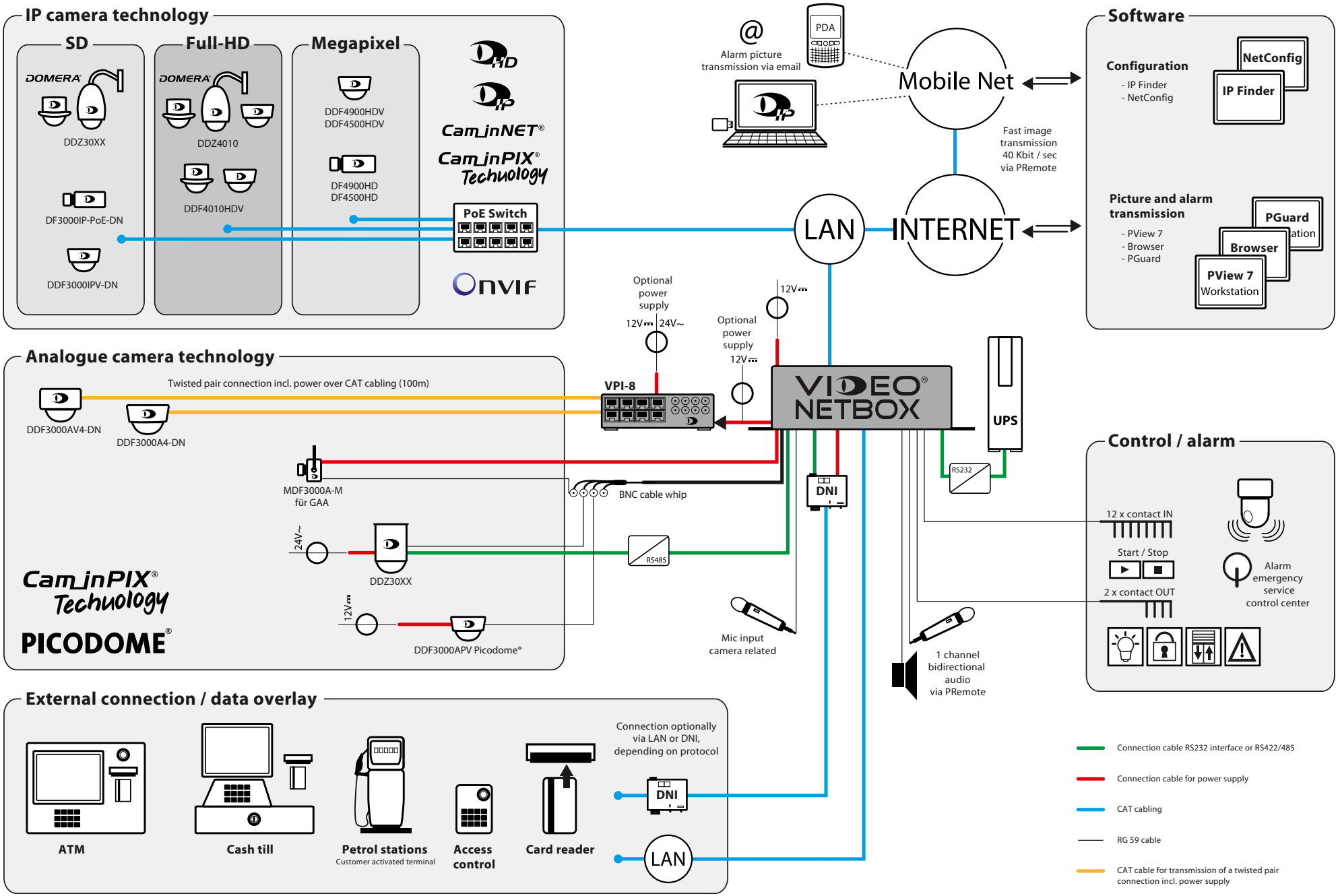

Trademarks which are designated by ® are registered trademarks of Dallmeier electronic 05/2010 V1.1.0 Product specifications subject to change without notice. © Dallmeier electronic

Dallmeier